## 26-G31-00 / ITEM 69

STOK NO: 12A182371
MALZEME ADI: O-RING

## 26-G31-00 / ITEM 70

STOK NO: 12A182393
MALZEME ADI: WART, GASKET



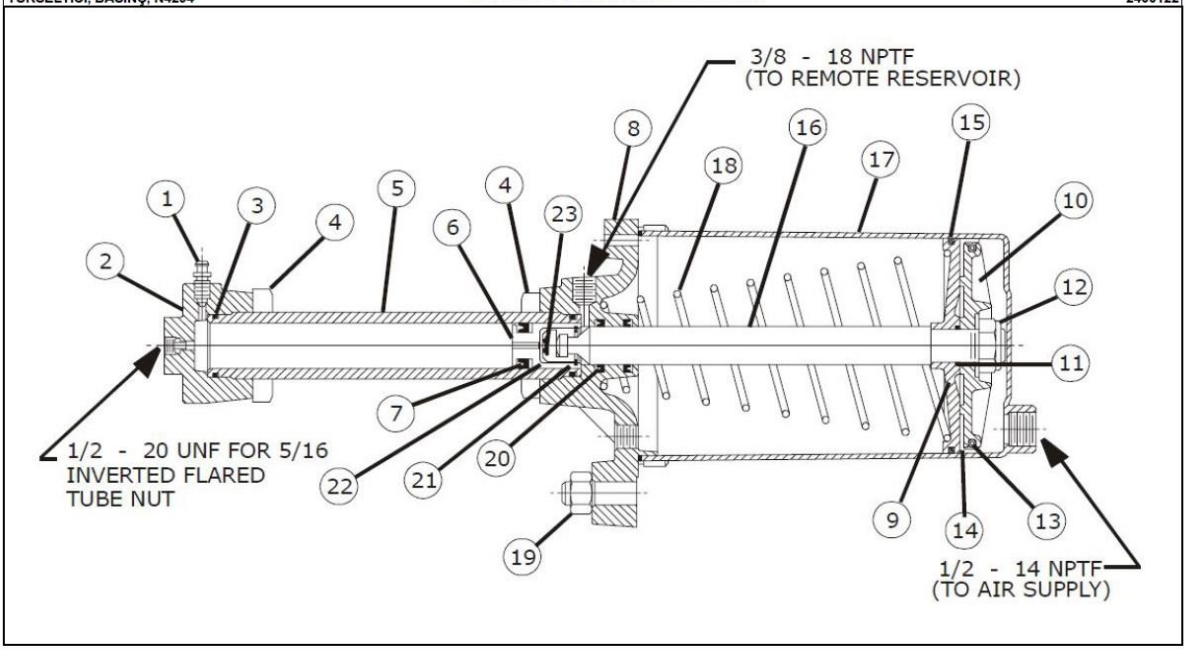




| REŞİM İÇİ NO | N.S.N. | PARÇA NUMARASI | ÜRETİCİ KODU | AÇIKLAYICI BİLGİLER | MİKTAR |
|---|---|---|---|---|---|
| | 4820 | CI-1074 | D8124 | KİT,SERVİS | 1 |
| 1 | 5365 | MX05814 | D8124 | TAPA,HAVA ALMA | 1 |
| 3 | 5331 | MX06651 | D8124 | O-RİNG | 2 |
| 6 | 3040 | C-14251-EB | D8124 | PİSTON | 1 |
| 7 | 8125 | MX06650 | D8124 | SİĞİL,U-CUP | 1 |
| 9 | 9515 | MX05816 | D8124 | PLEYT | 1 |
| 10 | 2815 | N-20053-A | D8124 | FOLLOWER | 1 |
| 11 | 5331 | MX05778 | D8124 | O-RING | 1 |
| 13 | 5325 | MX13712 | D8124 | RİNG | 1 |
| 14 | 8125 | MX05780 | D8124 | SİĞİL,CUP | 1 |
| 15 | 5330 | MX05777 | D8124 | ŞERİT,KEÇE | 1 |
| 17 | 3040 | MX05818 | D8124 | SİLİNDİR | 1 |
| 18 | 5360 | 600399-TP | D8124 | YAY | 1 |
| 20 | 8125 | MX05782 | D8124 | SİĞİL,U-CUP | 2 |
| 21 | 5325 | 44W11100 | D8124 | SEGMAN,KİLİTLEME | 1 |
| 23 | 5325 | MX05784 | D8124 | İNSERT | 1 |